1324ROCKPED

TOP VIEW

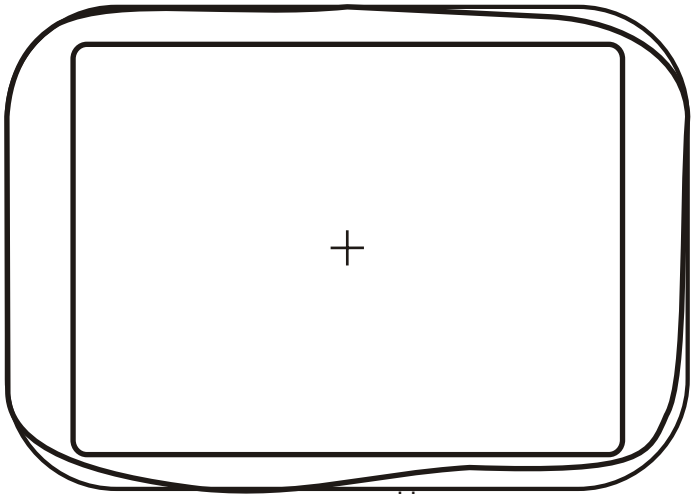

COVER VIEW

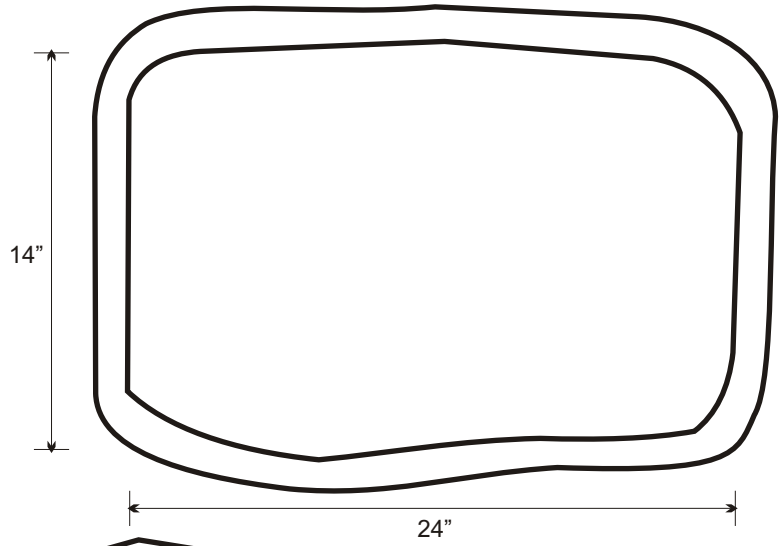

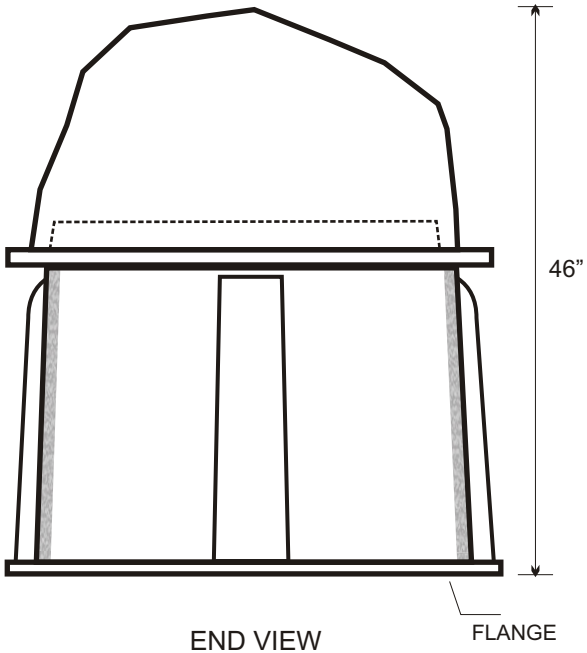

END VIEW

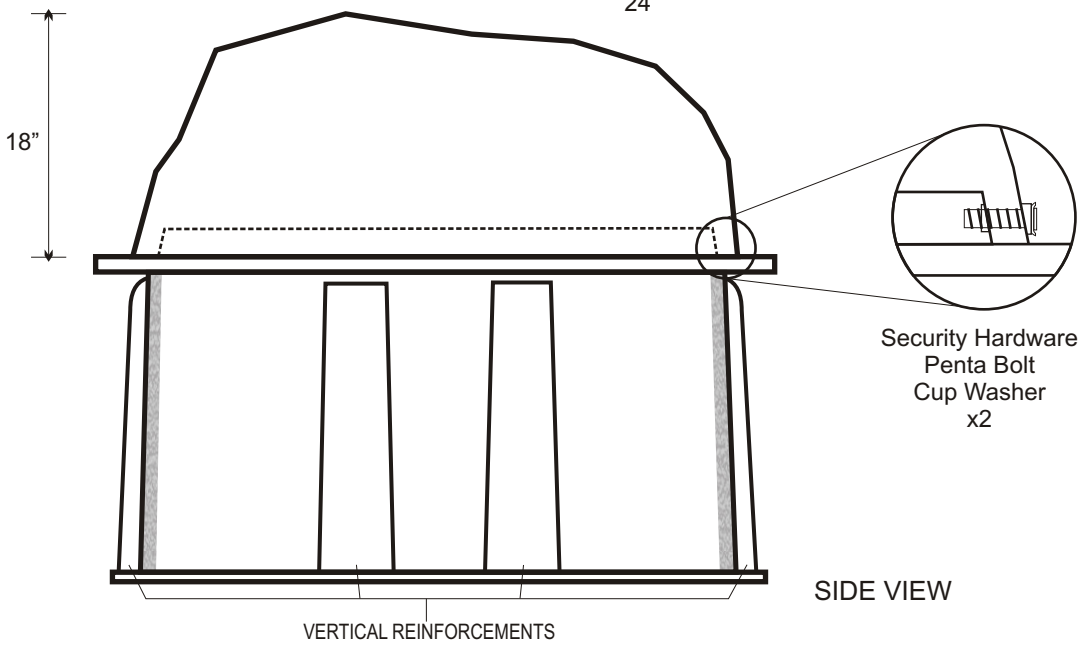

SIDE VIEW

Patent #5,782,584

Part No. 1324ROCKPED		
BODY: FRP		
COVER: POLYMER CONCRETE		
Weight 250 lbs.	Tolerance +/- 1/8”	Weight Load
Date Dec 8 2009	File 1324ROCKPED	

Martin Enterprises
“Your Underground Enclosure Experts”
WWW.MARTINFRP.COM

7231 Boulder Ave. #262
Highland, CA 92346
Tel: 909.967.7910
Fax: 951.928.4623

This product design is the sole property of Martin Enterprises. This design is NOT to be altered unless written permission is allowed by Martin Enterprises only.